PEDAL ASSEMBLIES

FLOOR MOUNT SINGLE MASTER CYLINDER PEDAL - BRAKE OR CLUTCH:

This pedal is often used as a clutch pedal with a single outlet master cylinder, or as a brake pedal in conjunction with dual outlet, tandem master cylinders on four wheel brake equipped vehicles. The pedal features all aluminum frame and arm construction with steel pivots, mounting studs, and an anti-skid pedal pad.

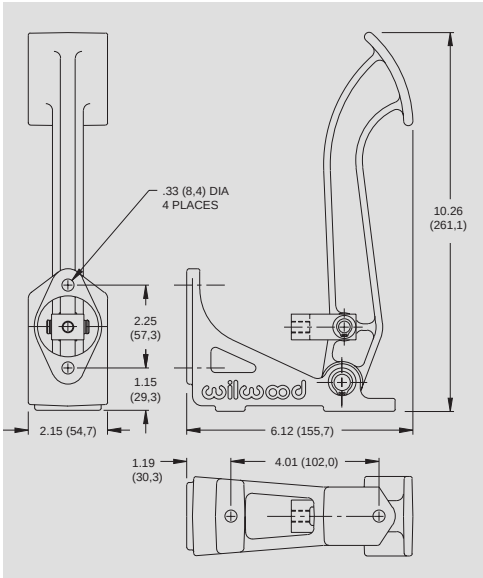

Single Mount Brake or Clutch Pedal
6:1 Ratio • **P/N 340-1289**

P/N 340-1289 Pedal with Optional Aluminum Master Cylinder (*)

FLOOR MOUNT DUAL MASTER CYLINDER BRAKE PEDAL WITH BALANCE BAR:

This is one of racing's most popular pedals for mounting two brake master cylinders with a bias balance bar. The pedal features all aluminum frame and arm construction with steel pivots, mounting studs, and an anti-skid pedal pad. Wilwood's clevis and pivot pin balance bar provide smooth and accurate settings of the brake pedal bias. It can be set and locked down with the jam nut, or attached to a remote cable for quick on-track adjustments.

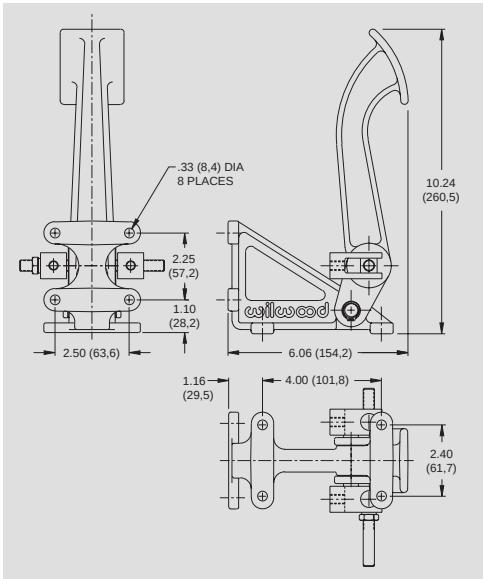

Dual Mount Brake Pedal with Balance Bar
6:1 Ratio • **P/N 340-1285**

P/N 340-1285 Pedal with Optional Aluminum Master Cylinders (*)

(*) Master cylinders must be ordered separately. See pages 104-109 for available selections

WARNING: The user or installer of any product from this catalog must determine its suitability for their intended purpose or application

FORWARD SWING MOUNT SINGLE MASTER CYLINDER PEDAL - BRAKE OR CLUTCH:

This pedal is often used as a clutch pedal with a single outlet master cylinder, or as a brake pedal in conjunction with dual outlet, tandem master cylinders on four wheel brake equipped vehicles. The pedal features all aluminum frame and arm construction with steel pivots, mounting studs, and an anti-skid pedal pad.

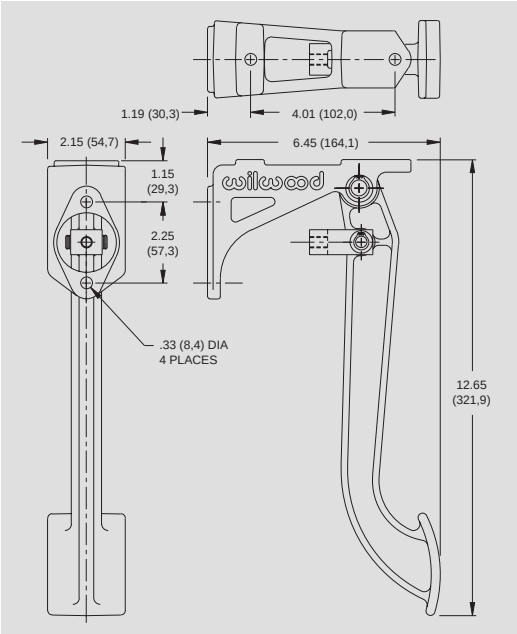

Single Mount Brake or Clutch Pedal
7:1 Ratio • **P/N 340-1290**

P/N 340-1290 Pedal with Optional Aluminum Master Cylinder (*)

FORWARD SWING MOUNT DUAL MASTER CYLINDER BRAKE PEDAL WITH BALANCE BAR:

This popular pedal mounts two brake master cylinders with a bias balance bar. The pedal features all aluminum frame and arm construction with steel pivots, mounting studs, and an anti-skid pedal pad. Wilwood's clevis and pivot pin balance bar provide smooth and accurate settings of the brake pedal bias. It can be set and locked down with the jam nut, or attached to a remote cable for quick on-track adjustments.

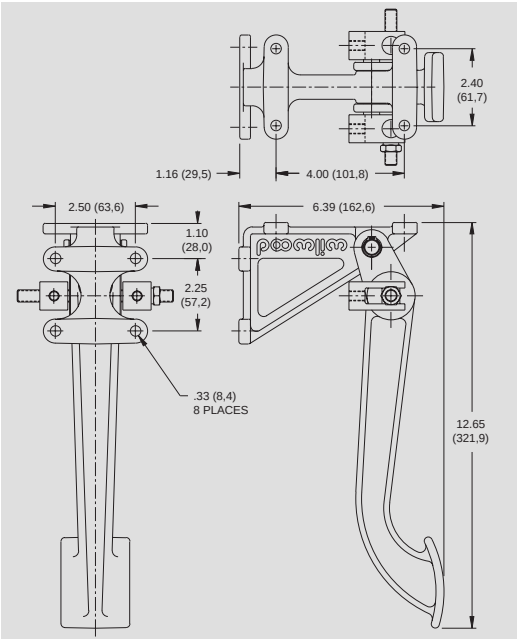

Dual Mount Brake Pedal with Balance Bar
7:1 Ratio • **P/N 340-1287**

P/N 340-1287 Pedal with Optional Aluminum Master Cylinders (*)

(*) Master cylinders must be ordered separately. See pages 104-109 for available selections

PEDAL ASSEMBLIES

FORWARD SWING MOUNT TRIPLE MASTER CYLINDER PEDAL - ALUMINUM:

This pedal assembly operates the brakes and the clutch together in one unit and positions the master cylinders outside of the firewall. It features all aluminum frame and arm construction with steel pivots, mounting studs, and anti-skid pedal pads. Wilwood's clevis and pivot pin balance bar provide smooth and accurate settings of the brake pedal bias. It can be set and locked down with the jam nut, or attached to a remote cable for quick on-track adjustments.

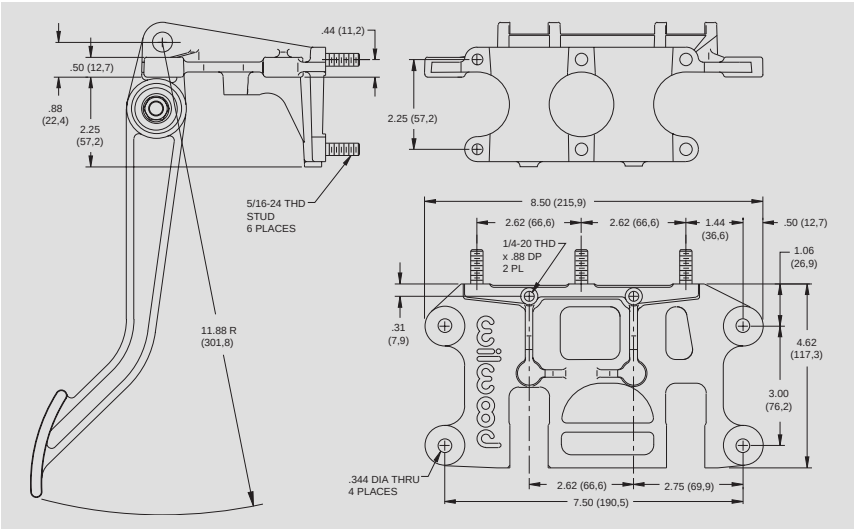

Triple Mount Brake and Clutch Pedal with Balance Bar
6.25:1 • **P/N 340-3950**

P/N 340-3950 Pedal with Optional
Master Cylinders (*)

FORWARD SWING MOUNT TRIPLE MASTER CYLINDER PEDAL - STEEL:

This steel pedal assembly was built for cars racing under rules that prohibit aluminum pedal arms. This assembly operates the brakes and the clutch together in one unit and positions the master cylinders outside of the firewall. It features an aluminum frame with steel arm construction, steel pivots, mounting studs, and anti-skid pedal pads. Wilwood's clevis and pivot pin balance bar provide smooth and accurate settings of the brake pedal bias. It can be set and locked down with the jam nut, or attached to a remote cable for quick on-track adjustments.

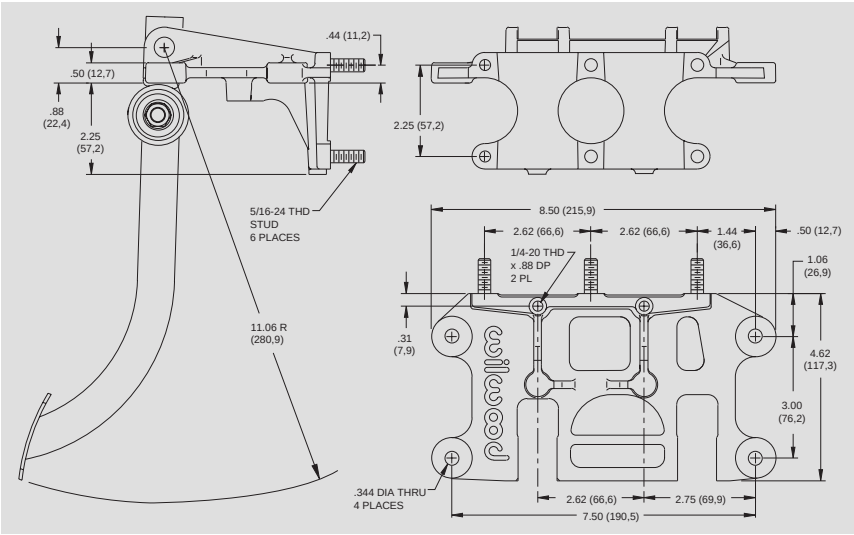

Triple Mount Brake and Clutch Pedal with Balance Bar
6.25:1 Ratio • **P/N 340-6916**

P/N 340-6916 Pedal with Optional
Master Cylinders (*)

(*) Master cylinders must be ordered separately. See pages 104-109 for available selections

WARNING: The user or installer of any product from this catalog must determine its suitability for their intended purpose or application

REVERSE SWING MOUNT DUAL MASTER CYLINDER BRAKE PEDAL WITH BALANCE BAR:

This pedal mounts two brake master cylinders with a bias balance bar and positions the master cylinders inside the firewall and away from engine heat. The pedal features all aluminum frame and arm construction with steel pivots, mounting studs, and an anti-skid pedal pad. Wilwood's clevis and pivot pin balance bar provide smooth and accurate settings of the brake pedal bias. It can be set and locked down with the jam nut, or attached to a remote cable for quick on-track adjustments. Two ratios are offered to suit mounting and leverage requirements.

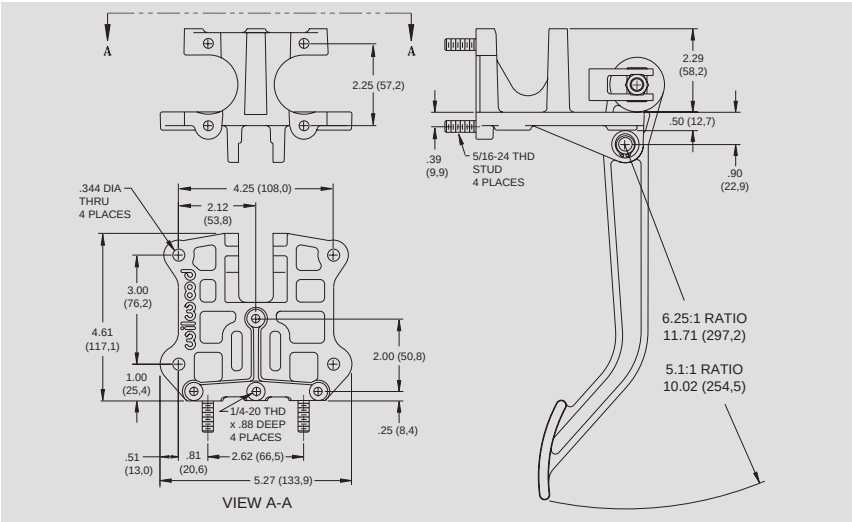

Reverse Dual Mount Brake Pedal with Balance Bar
5.1:1 Ratio - **P/N 340-5180** • 6.25:1 Ratio - **P/N 340-5181**

P/N 340-5181 Pedal with Optional Master Cylinders (*)

REVERSE SWING MOUNT TRIPLE MASTER CYLINDER CLUTCH & BRAKE PEDAL WITH BALANCE BAR:

This assembly combines the brake and clutch pedals together in one unit and positions the master cylinders inside the firewall and away from engine heat. It features all aluminum frame and arm construction with steel pivots, mounting studs, and anti-skid pedal pads. Wilwood's clevis and pivot pin balance bar provide smooth and accurate settings of the brake pedal bias. It can be set and locked down with the jam nut, or attached to a remote cable for quick on-track adjustments. Three ratio options are offered to suit mounting and leverage requirements.

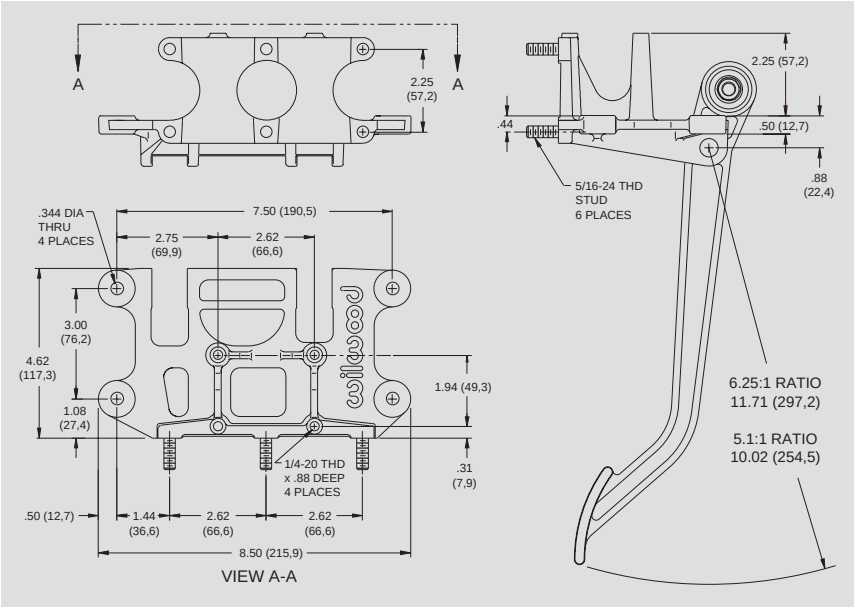

Triple Mount Clutch and Brake Pedal with Balance Bar
5.1:1 - **P/N 340-4828** • 6.25:1 - **P/N 340-3342**
6.25:1 Brake / 5.1:1 Clutch - **P/N 340-6451**

P/N 340-3342 Pedal with Optional Master Cylinders (*)

(*) Master cylinders must be ordered separately. See pages 104-109 for available selections

PEDAL ASSEMBLIES

REMOTE BRAKE BIAS ADJUSTER:

Wilwood's Remote Balance Bar Cable Adjuster is used with balance bars to adjust front-to-rear brake bias during changing race conditions. The highly visible bright blue knob features a special bi-directional detente control providing the driver with positive adjustment feedback. The special five foot cable and housing (which can be cut to any length for a custom fit) provides an optimum bending radius for easy installation and smooth performance in tight confines. The assembly comes with two label faces for either front-to-rear or rear-to-front adjustment. Standard 3/8-24 thread fits Wilwood and most commonly used balance bars.

Remote Brake Bias Adjuster

ORDERING INFORMATION:

DESCRIPTION	PART NO.
Remote Brake Bias Adjuster	340-4990

60 DEGREE BALANCE PEDAL ASSEMBLY:

This lightweight unit is ideal for Dirt Modifieds, Champ Cars, Sprint Cars and Midgets where master cylinders must be mounted in a remote location because of tight space constraints. Usually mounted to the driver's left side chassis rail, the units balance bar controls two standard mount master cylinders with remote mounted reservoirs. The 60 degree mounting angle allows for tight fit applications and easy accessibility. Strong cast aluminum housing and balance bar weighs only 1.8 pounds. An adjuster knob is included with each assembly.

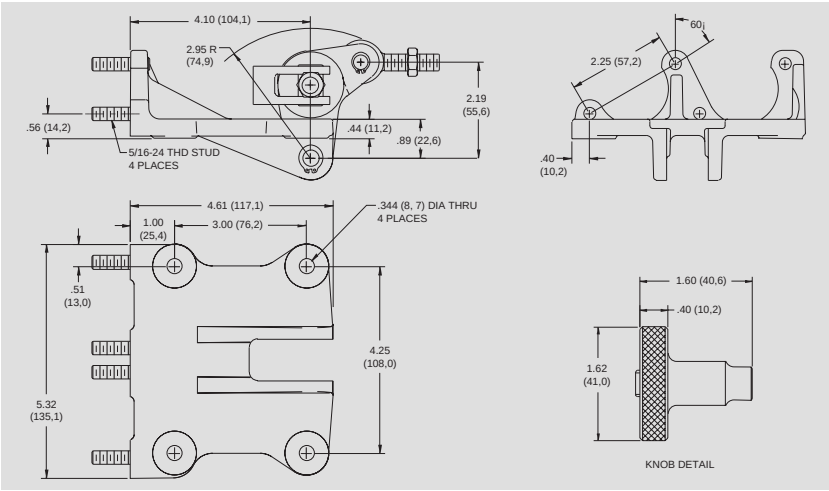

60 Degree Balance Bar Assembly • **P/N 340-4630**

60 Degree Mount (*)

BALANCE BAR ASSEMBLY:

Our balance bar assembly is designed to maximize travel and adjustability providing increased front-to-rear bias control. The precision spherical bearing with corrosion resistant finish is durable and smooth performing. The 3/8-24 threaded adjuster bar is high strength aircraft alloy and fitted with lightweight, maintenance free clevises and thrust washers to eliminate binding under extreme pivot angles.

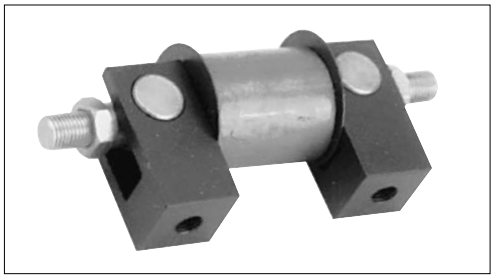

Balance Bar

ORDERING INFORMATION:

DESCRIPTION	PART NO.
Balance Bar	340-1757

(*) Master cylinders must be ordered separately. See pages 104-109 for available selections

BRAKE PEDAL GUIDELINES:

Wilwood pedal assemblies and integrated balance bars have been designed specifically for racing applications. Properly set-up, this assembly will allow for the precise adjustment of front-to-rear brake bias. The advantages of an adjustable balance bar and dual master cylinders are:

- •Brake proportioning can be adjusted by use of different size master cylinder bores for front and rear brakes.
- •Front to rear brake balance can be fine tuned by adjusting the balance bar.
- •With two independent hydraulic systems, should one master cylinder fail, the other system may remain functional.

Brake pedals should be mounted securely. When possible, keep the master cylinder reservoir level higher than the horizontal plane of the calipers to prevent excessive fluid drain back which can result in double pumping of the pedal. If this is not possible, a two pound residual pressure valve should be plumbed into the brake line at the exit of the master cylinder to prevent fluid drain back (do not confuse the two pound valve with the ten pound version; the ten pound valve is for use with drum brakes only).

Brake pedals should be free to return when no pressure is being applied, allowing the master cylinder pushrod to return to its undepressed position. In some cases, the master cylinder spring (internal) may not be strong enough to fully return the pushrod; in this case an additional pedal return spring can be used. There are two important items for consideration:

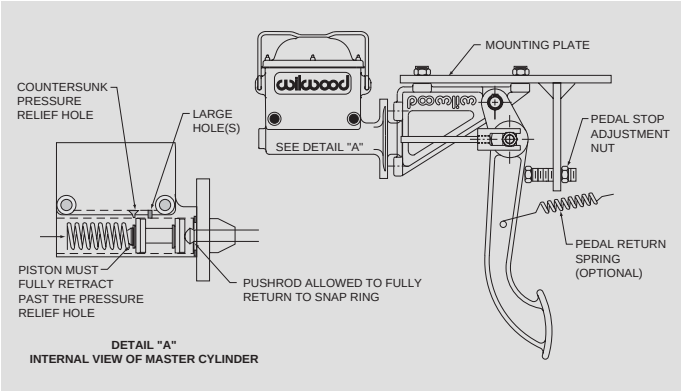

Figure 1. Master cylinder pedal stop and return hole position

1. The brake pedal should have an adjustable return stop on it when a strong pedal return spring is used. This prevents the master cylinder from excessively banging the snap ring stop inside the master cylinder bore (visible under the rubber boot). Adjust the stop so the pedal stops returning at the point when the master cylinder piston retracts against the snap ring, Figure 1.

2. The master cylinder piston must fully retract. If the master cylinder piston is not allowed to fully retract when the brake pedal is not applied, the primary inside seal will not return past the small pressure relief hole (visible within the master cylinder reservoir on some master cylinders). This can cause excessive residual line pressure and contribute to brake drag and an overheating condition, see Figure 1, Detail “A”.

BALANCE BAR ADJUSTING:

The balance bar is an adjustable lever (usually a threaded rod), that pivots on a spherical bearing and uses two separate master cylinders for the front and rear brakes. Most balance bars are part of a pedal assembly that also provides a mounting for the master cylinders. When the balance bar is centered, it pushes equally on both master cylinders creating equal pressure, given that the master cylinders are the same size bore. When adjusted as far as possible toward one master cylinder it will push approximately twice as hard on that cylinder as the other.

To set up the balance bar, thread the master cylinder pushrods through their respective clevises to obtain the desired position. Threading one pushrod into its respective clevis means threading the other one out the same amount. Sometimes this will lead to a “cocked” balance bar when the pedal is in the relaxed position, see Figure 2, “no pedal effort”. This is acceptable as long as each master cylinder pushrod is completely free of pressure when the pedal is relaxed.

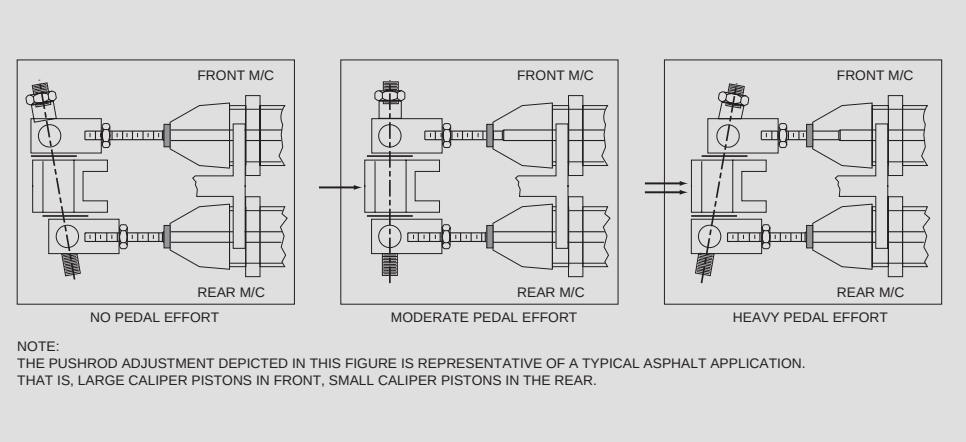

Figure 2. Balance bar lever adjustment

PEDAL ASSEMBLIES

BALANCE BAR ADJUSTING:

It is **important** that the operation of the balance bar functions without interference by over adjustment. This can occur when a clevis jams against the side of the pedal or the lever (bolt) hits the pedal bore during any point of pedal travel, Figure 3.

Lever movement should be unimpeded throughout pedal travel. In the neutral position, clevises should have between .20" - .25" total clearance between the side of the pedal. The large washers between the pedal and clevis should remain loose. Make sure that the master cylinder pushrods remain true in relationship to the cylinder during entire pedal travel; pushrods should not be pushing master cylinder pistons at an angle. See Figure 4.

NOTE: In its non-depressed position, the pedal and balance bar should allow the pushrod of the master cylinders to fully return. This can be checked by feeling pushrods for very *slight* movement, not loose movement. Master cylinder pistons should be against the retaining snap ring (under boot).

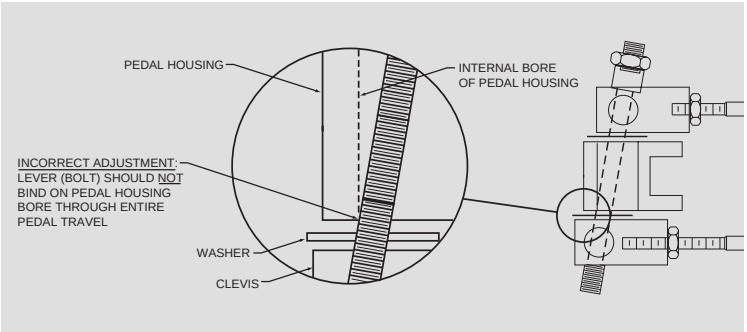

Figure 3. Balance bar lever interference

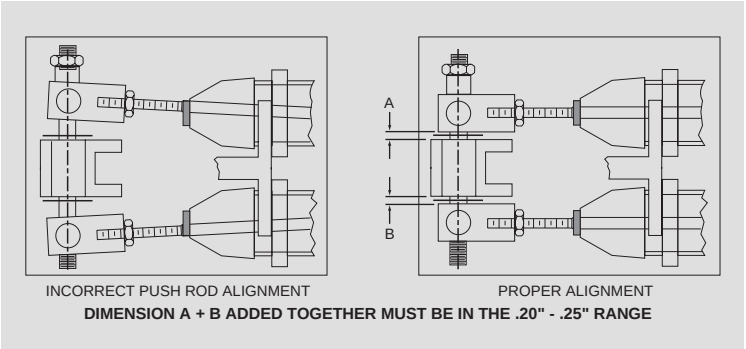

Figure 4. Example of pushrod alignment

PEDAL RATIOS / MECHANICAL LEVERAGE:

Pedal ratio, or mechanical leverage is the ratio calculated from the length from the pivot point of the pedal to the center of the foot pedal (A), divided by the length from the pivot point to the master cylinder pushrod (B). Refer to the figures below.

Mechanical leverage is simply a means of increasing the brake force without increasing your leg effort. As "A" gets longer and "B" gets shorter, the mechanical leverage increases brake force without pushing harder on the pedal. The disadvantage is that the pedal stroke also increases, requiring you to push the pedal further.

With a 1 inch master cylinder stroke, a 100 pound push on the pedal, and the pedal having a 4:1 ratio, the force is 4 x 100 = 400 pounds, and the stroke is 4 x 1 = 4 inches. With a 100 pound push on the pedal, and the pedal having a 6:1 ratio, the force is 6 x 100 = 600 pounds, and the stroke is 6 x 1 = 6 inches.

If uncertain about which pedal ratio is right for your application, a 6:1 ratio is an excellent starting point.

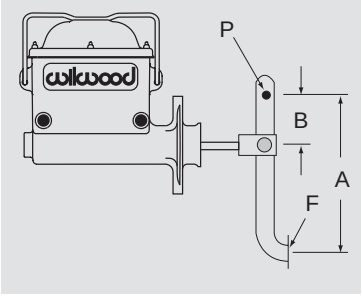

Figure 1

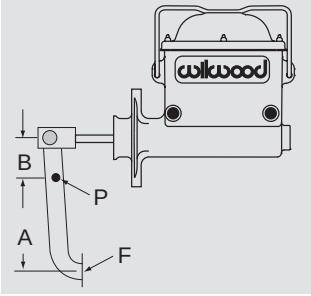

Figure 2

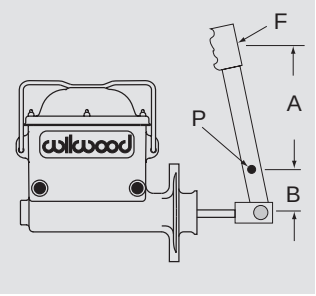

Figure 3

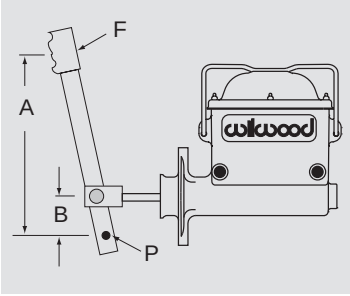

Figure 4

A = Distance from pivot point to middle of push / pull point
B = Distance from pivot to point of push on master cylinder
P = Pivot point
F = Force or push